Marchio / Brand ZUCCHETTI

Classe / Class WW

VELOCE

Z92266 Bocca di erogazione. / Wall spout.



Bocca di erogazione L. 175 mm

Wall spout L 175 mm.

Marchio / Brand ZUCCHETTI

Classe / Class WW

VELOCE

Z92266

Finiture / Finishes



Cromo / Chrome



C3

Nickel Spazzolato / Brushed Nickel



P30

British Gold PVD / British Gold PVD



P31

Brushed PVD British gold / Brushed PVD British gold



P60

Platino PVD / Platinum PVD



P80

Total black PVD / Total black PVD



P81

Brushed total black PVD / Brushed total black PVD

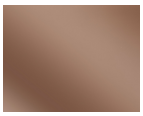

P90

Copper PVD / Copper PVD

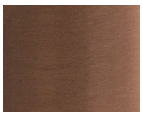

P91

Brushed PVD Copper / Brushed PVD Copper

Note / Notes

VELOCE

Z92266 Disegno Complessivo / Overall Drawing

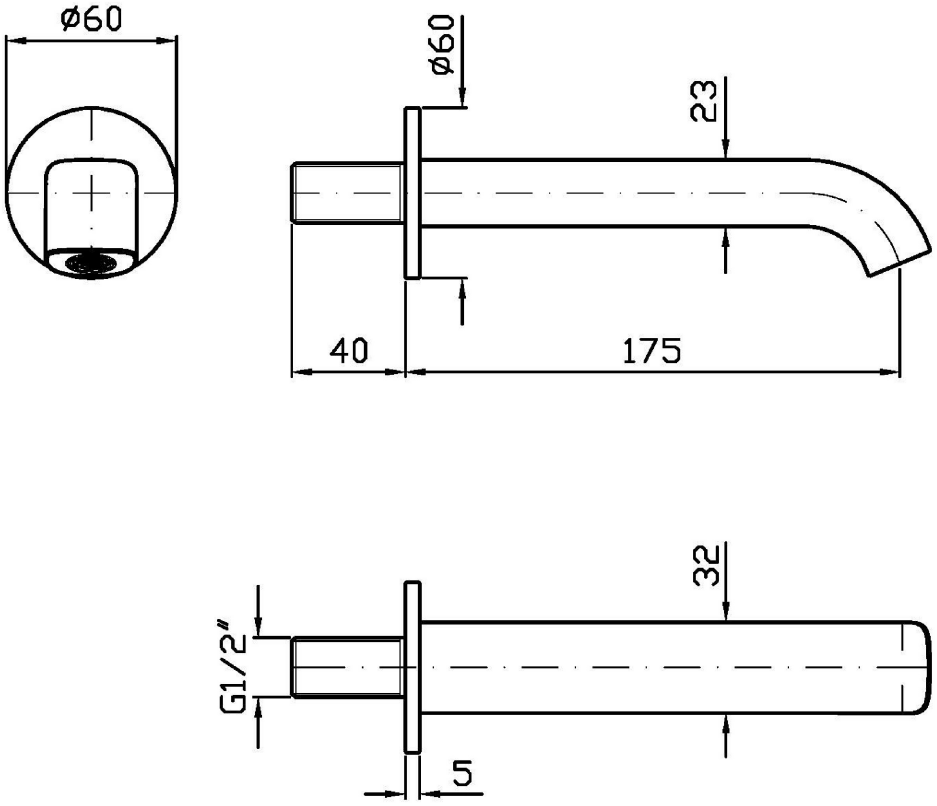

VELOCE

Z92266 Portate / Flowrates (lt/min)

PRESSIONE PRESSURE	1 BAR	2 BAR	3 BAR	4 BAR	5 BAR
P1 BOCCA VASCA WALL SPOUT	**9,4**	**13**	**15**	**18**	**20**
P2					
P3					
P4					
P5					

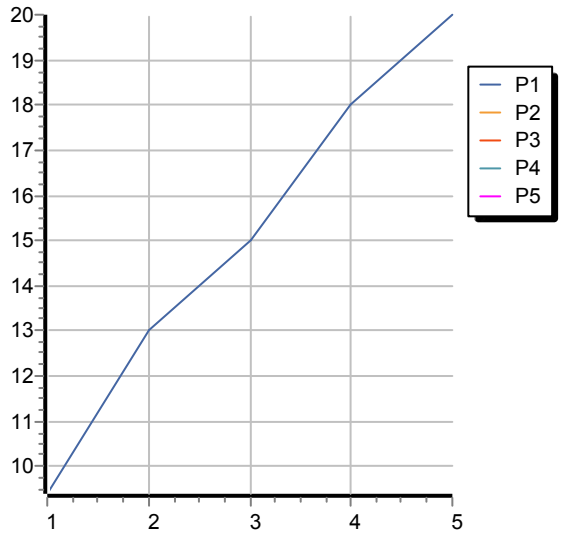

VELOCE

Z92266 Pesi e Misure / Weights and Sizes

Peso (Kg) Weight (lb)	0,90 (Kg)	1,98 (lb)
Volume test (dc3) - (in3)	1,15 (dc3)	70,18 (in3)
h (mm) - (in)	45,00 (mm)	1,77 (in)
L1 (mm) - (in)	134,00 (mm)	5,28 (in)
L2 (mm) - (in)	190,00 (mm)	7,48 (in)

