Marchio / Brand ZUCCHETTI

Classe / Class WW

BELLAGIO

ZB1801 Termostatico incasso doccia con rubinetto d'arresto. / Built-in thermostatic shower mixer, 1 stop valve.

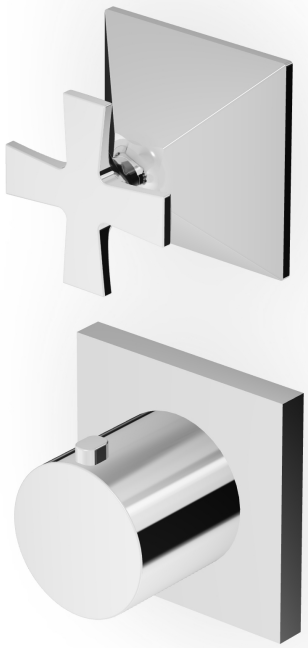

Termostatico incasso doccia da 3/4", con rubinetto d'arresto. Installazione possibile sia in verticale che in orizzontale.

3/4" built-in thermostatic shower mixer with stop valve. Both vertical and horizontal installation possible.

R96730

Parte incasso / Built-in part



Marchio / Brand ZUCCHETTI

Classe / Class WW

BELLAGIO

ZB1801

Finiture / Finishes



Cromo / Chrome



C8

Nickel Lucido / Polished Nickel



P21

PVD brushed chocolate / PVD brushed chocolate



P30

British Gold PVD / British Gold PVD



P31

Brushed PVD British gold / Brushed PVD British gold

Note / Notes

BELLAGIO

ZB1801 Disegno Complessivo / Overall Drawing

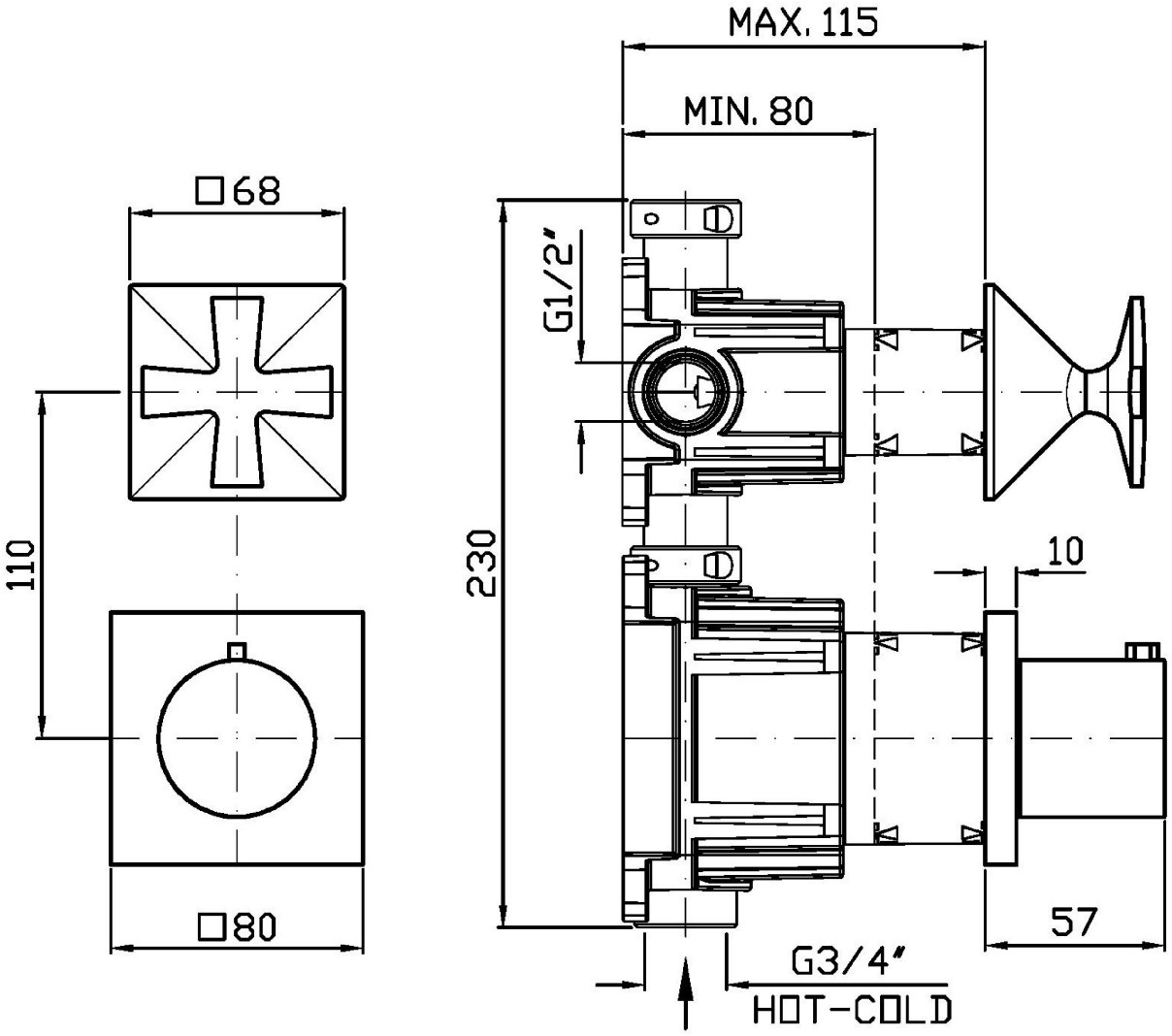

Marchio / Brand ZUCCHETTI

Classe / Class WW

BELLAGIO

ZB1801 Esplosi / Exploded

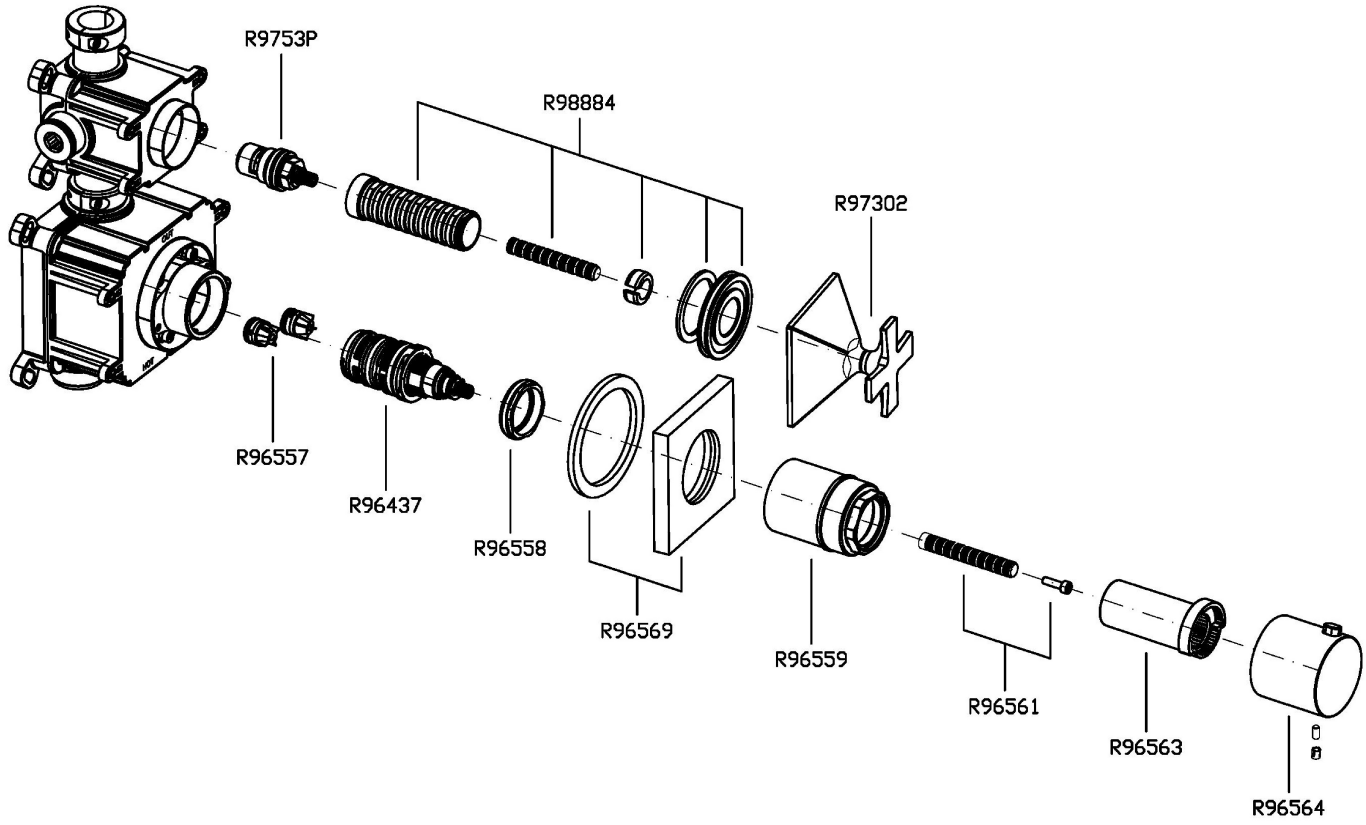

BELLAGIO

ZB1801 Portate / Flowrates (lt/min)

PRESSIONE PRESSURE	1 BAR	2 BAR	3 BAR	4 BAR	5 BAR
P1 1 RUBINETTO APERTO 1 TAP OPENED	**13,7**	**19,1**	**23,2**	**26,2**	**29,5**
P2					
P3					
P4					
P5					

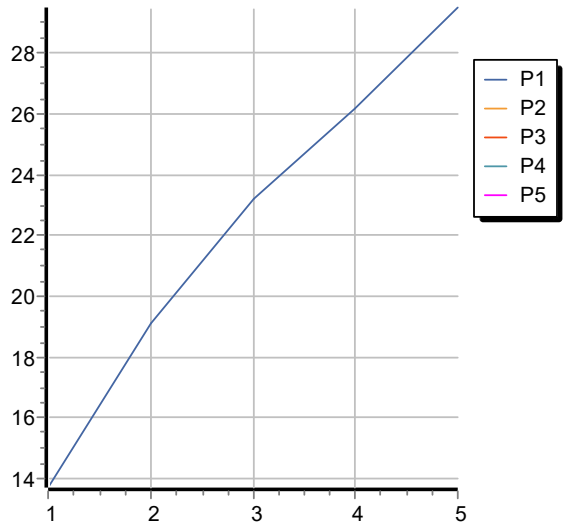

BELLAGIO

ZB1801 Pesi e Misure / Weights and Sizes

Peso (Kg) Weight (lb)	2,20 (Kg)	4,85 (lb)
Volume test (dc3) - (in3)	7,50 (dc3)	457,68 (in3)
h (mm) - (in)	90,00 (mm)	3,54 (in)
L1 (mm) - (in)	250,00 (mm)	9,84 (in)
L2 (mm) - (in)	333,00 (mm)	13,11 (in)

