Marchio / Brand ZUCCHETTI

Classe / Class WW

BELLAGIO

ZB1804 Termostatico incasso doccia con 4 rubinetti d'arresto. / Built-in thermostatic shower mixer 4 stop valves.



Termostatico incasso doccia da 3/4", con 4 rubinetti d'arresto. Installazione possibile sia in verticale che in orizzontale.

3/4" built-in thermostatic shower mixer with 4 stop valves. Both vertical and horizontal installation possible.

R96733

Parte incasso / Built-in part



Marchio / Brand ZUCCHETTI

Classe / Class WW

BELLAGIO

ZB1804

Finiture / Finishes



Cromo / Chrome



C8

Nickel Lucido / Polished Nickel



P21

PVD brushed chocolate / PVD brushed chocolate



P30

British Gold PVD / British Gold PVD



P31

Brushed PVD British gold / Brushed PVD British gold

Note / Notes

BELLAGIO

ZB1804 Disegno Complessivo / Overall Drawing

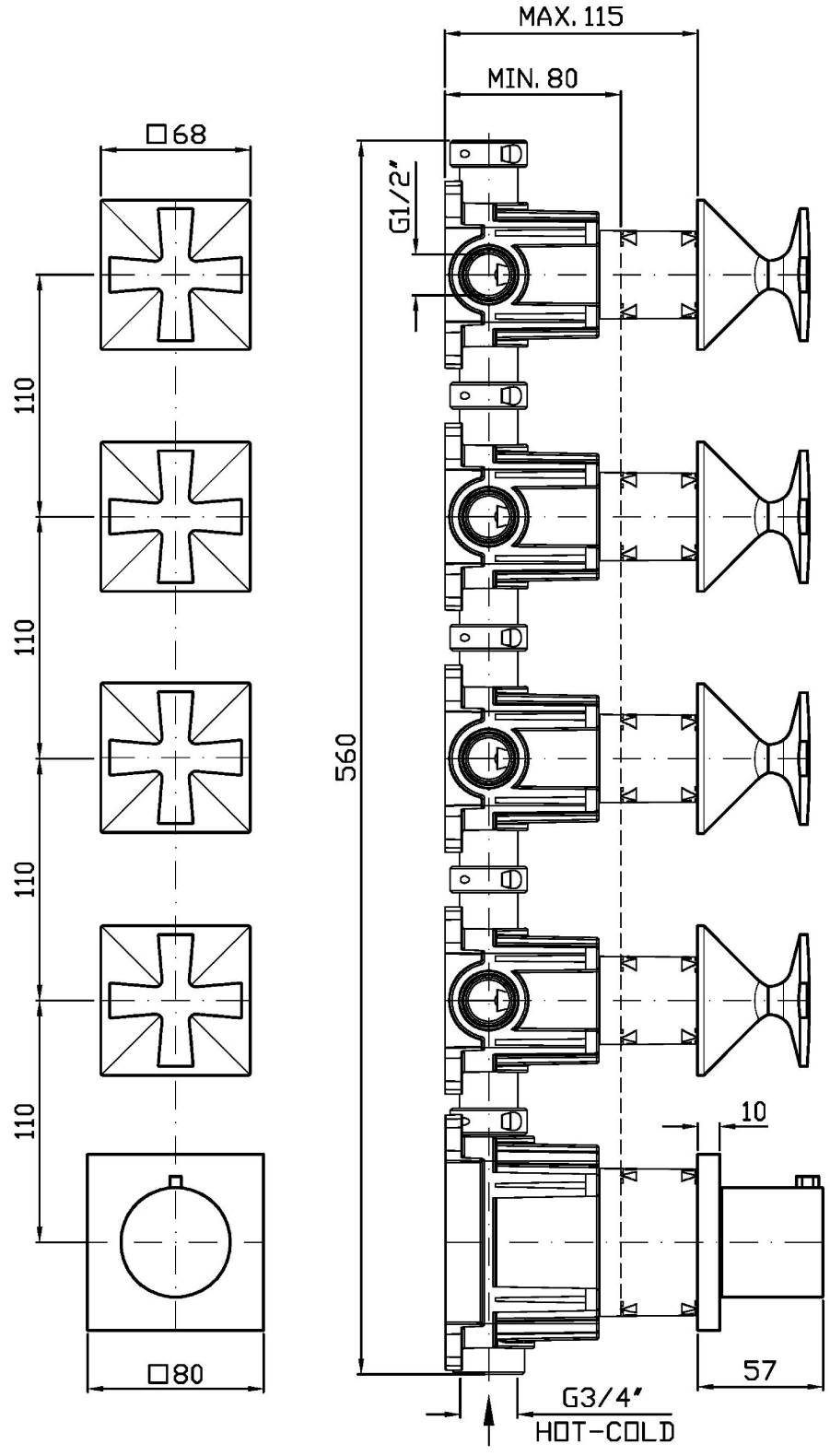

Marchio / Brand ZUCCHETTI

Classe / Class WW

BELLAGIO

ZB1804 Esplosi / Exploded

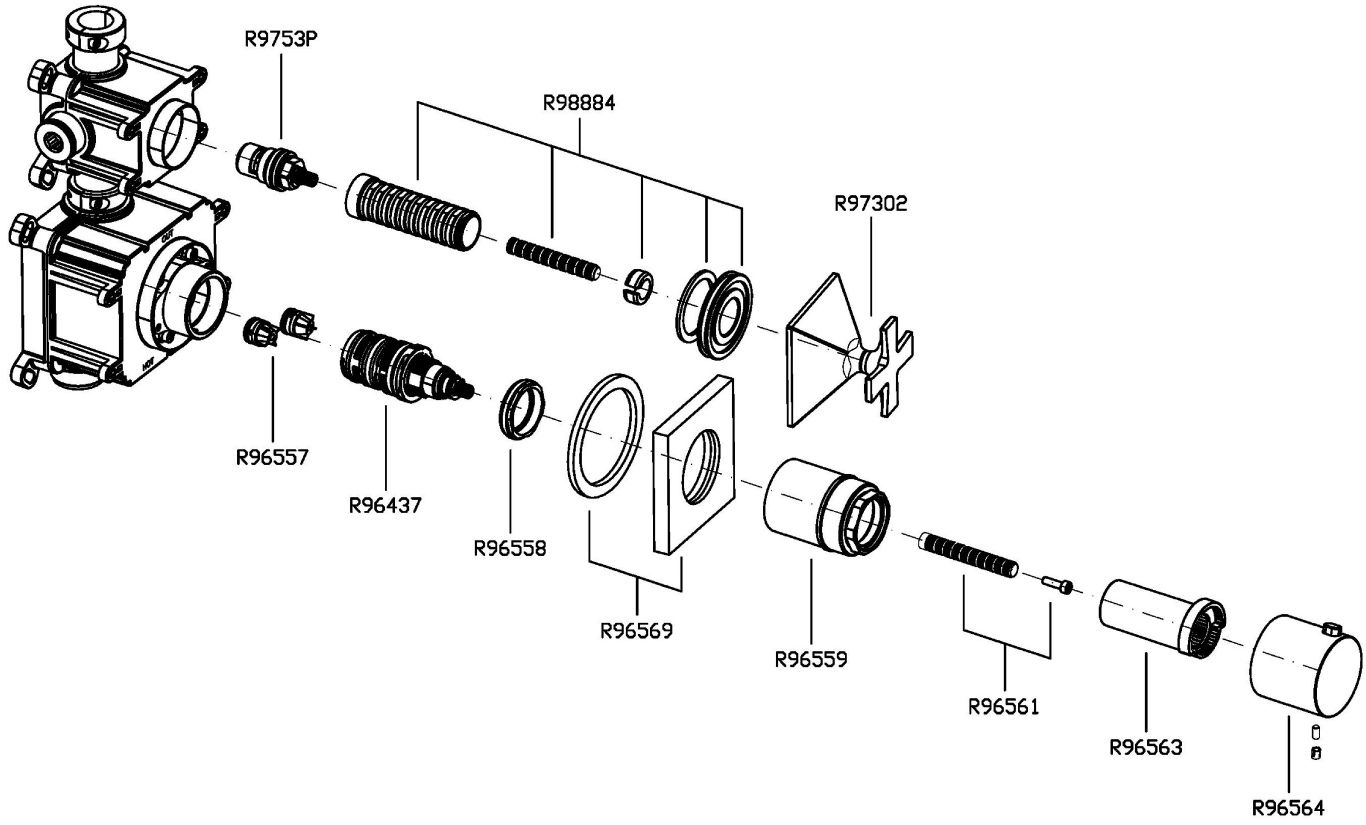

BELLAGIO

ZB1804 Portate / Flowrates (lt/min)

PRESSIONE PRESSURE	1 BAR	2 BAR	3 BAR	4 BAR	5 BAR
P1 1 RUBINETTO APERTO 1 TAP OPENED	**13,7**	**19,1**	**23,2**	**26,2**	**29,5**
P2 2 RUBINETTO APERTI 2 TAPS OPENED	**16,1**	**22,2**	**27**	**30,5**	**34,2**
P3 3 RUBINETTO APERTI 3 TAPS OPENED	**16,8**	**23**	**28**	**31,6**	**34,2**
P4 4 RUBINETTO APERTI 4 TAPS OPENED	**17**	**23,1**	**28,2**	**32**	**36**
P5					

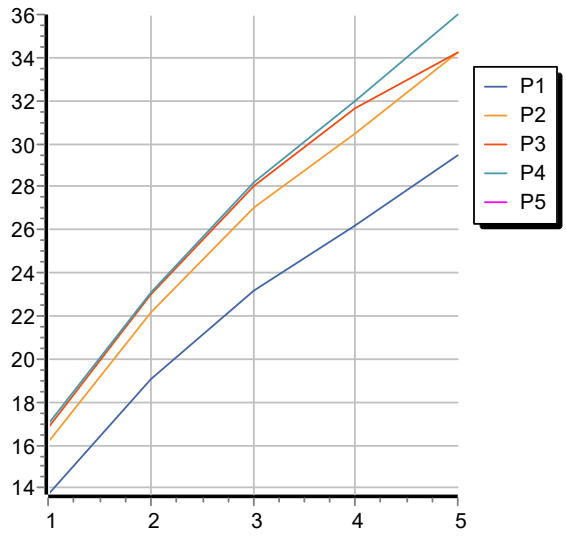

BELLAGIO

ZB1804 Pesi e Misure / Weights and Sizes

Peso (Kg) Weight (lb)	3,60 (Kg)	7,94 (lb)
Volume test (dc3) - (in3)	11,01 (dc3)	671,87 (in3)
h (mm) - (in)	90,00 (mm)	3,54 (in)
L1 (mm) - (in)	335,00 (mm)	13,19 (in)
L2 (mm) - (in)	365,00 (mm)	14,37 (in)

