Marchio / Brand ZUCCHETTI

Classe / Class WW

HELM

ZHE801.X Termostatico incasso doccia con un rubinetto d'arresto. / Built-in thermostatic shower mixer with stop valve.



Termostatico incasso doccia da 3/4", in acciaio inox AISI 316L, con un rubinetto d'arresto. Installazione possibile sia in verticale che in orizzontale.

3/4" built-in thermostatic shower mixer in AISI 316L stainless steel, with stop valve. Both vertical and horizontal installation possible.

R96730

Parte incasso / Built-in part



Marchio / Brand ZUCCHETTI

Classe / Class WW

HELM

ZHE801.X

Finiture / Finishes



X

Acciaio inox spazzolato / Brushed stainless steel

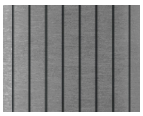

XG2

Acciaio inox spazz.-godr. verticale / Br. stainless steel-Vertical knurling

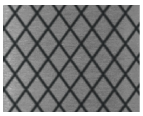

XG3

Acciaio inox spazz.–godronatura diagonale / Br. stainless steel-diagonal



XP21

Brushed PVD chocolate / Brushed PVD chocolate



XP21G

Brushed PVD chocolate godronatura verticale / Br. PVD chocolate-vertical



XP21G

Brushed PVD chocolate-godronatura diagonale / Br. PVD



XP31

Brushed PVD British gold / Brushed PVD British gold



XP31G

Br. PVD British gold-godr. verticale / Br. PVD British gold-vertical knurling

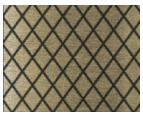

XP31G

Br. PVD British gold-godr. diagonale / Br. PVD British gold-diagonal knurling



XP41

Brushed PVD gold / Brushed PVD gold



XP41G

Br. PVD gold-godronatura verticale / Brushed PVD gold-vertical knurling

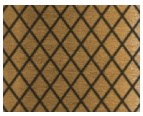

XP41G

Br. PVD gold-godr. diagonale / Br. PVD gold-diagonal knurling



XP81

PVD Brushed Total Black / PVD Brushed Total Black

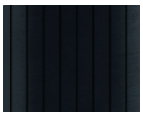

XP81G

Br. PVD Total Black-godr. verticale / Br. PVD Total Black-vertical knurling



XP81G

Br. PVD Total Black-godr. diagonale / Br. PVD Total Black-diagonal knurling



XP91

Brushed PVD copper / Brushed PVD copper



XP91G

Br. PVD copper-godr. verticale / Br. PVD copper-vertical knurling



XP91G

Br. PVD copper-godr. diagonale / Br. PVD copper-diagonal knurling

Note / Notes

HELM

ZHE801.X Disegno Complessivo / Overall Drawing

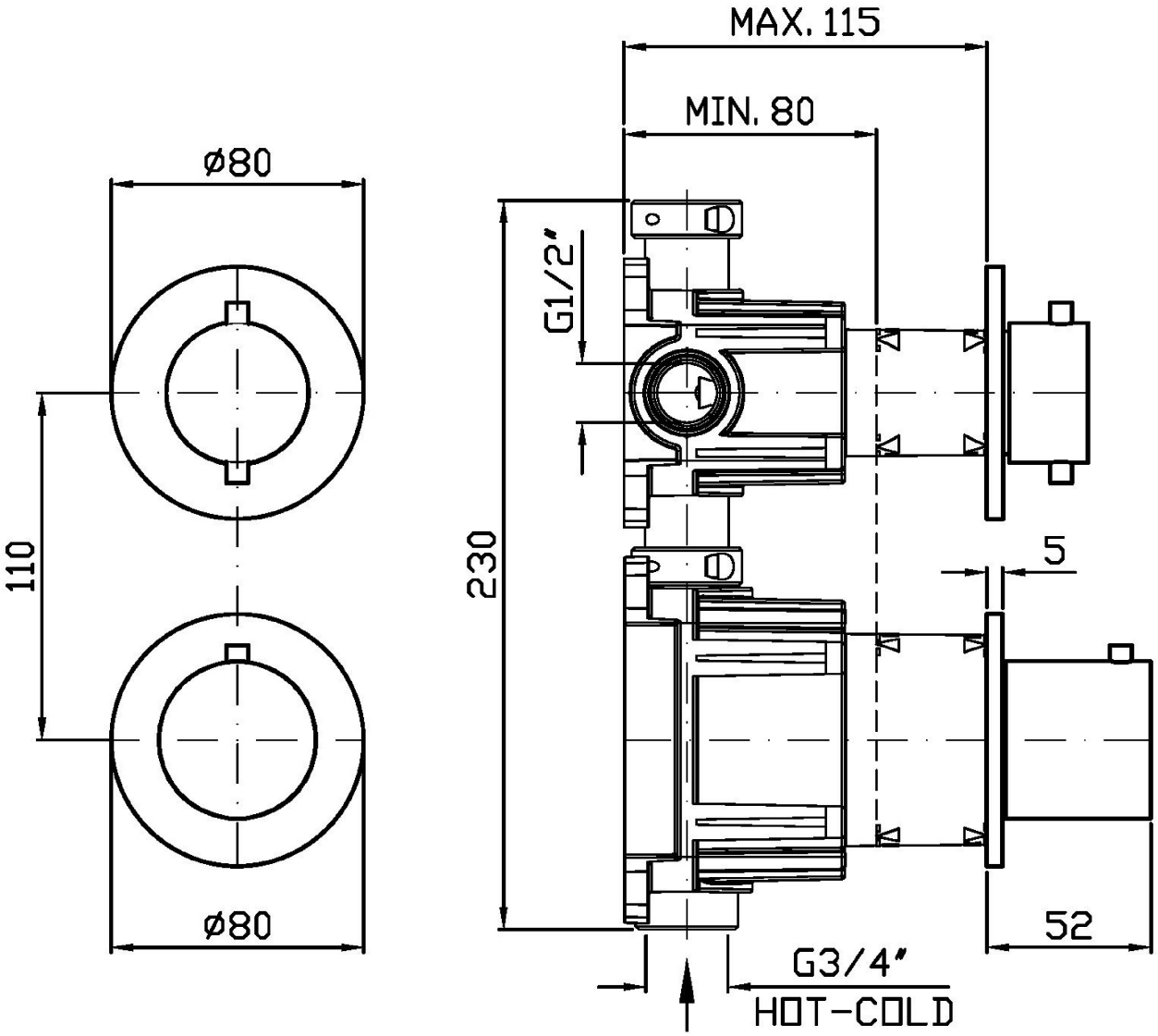

Marchio / Brand ZUCCHETTI

Classe / Class WW

HELM

ZHE801.X Esplosi / Exploded

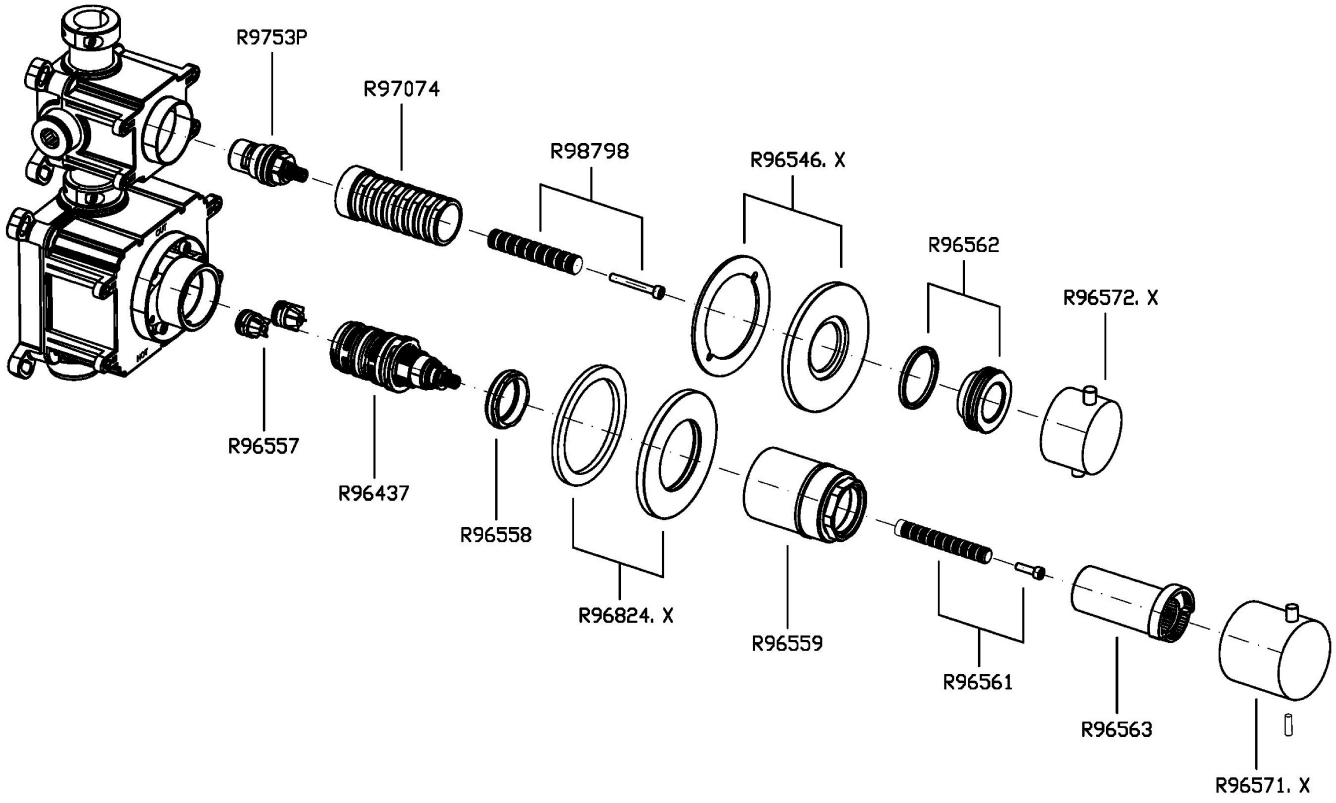

HELM

ZHE801.X Portate / Flowrates (lt/min)

PRESSIONE PRESSURE	1 BAR	2 BAR	3 BAR	4 BAR	5 BAR
P1 1 RUBINETTO APERTO 1 TAP OPENED	**13,7**	**19,1**	**23,2**	**26,2**	**29,5**
P2					
P3					
P4					
P5					

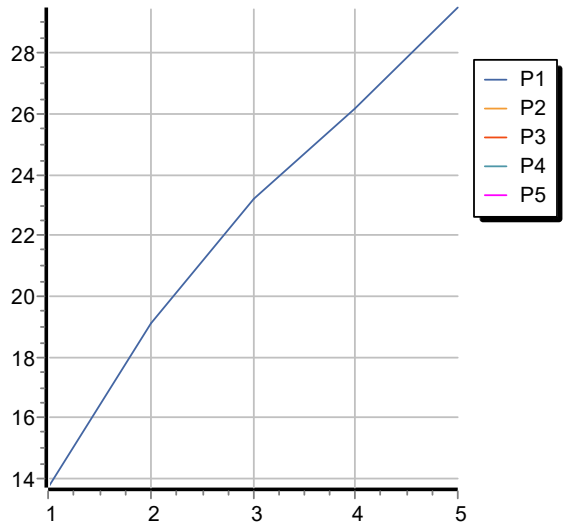

HELM

ZHE801.X Pesi e Misure / Weights and Sizes

Peso (Kg) Weight (lb)	1,70 (Kg)	3,75 (lb)
Volume test (dc3) - (in3)	7,50 (dc3)	457,68 (in3)
h (mm) - (in)	90,00 (mm)	3,54 (in)
L1 (mm) - (in)	250,00 (mm)	9,84 (in)
L2 (mm) - (in)	333,00 (mm)	13,11 (in)

