Marchio / Brand ZUCCHETTI

Classe / Class DOCCE

HOOP

ZHO822 Termostatico incasso doccia a 3 pulsanti. / Built-in thermostatic shower mixer, with 3 on-off buttons.

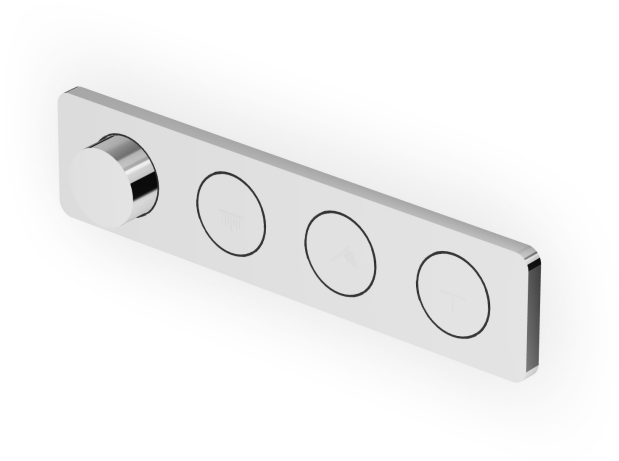

Termostatico incasso doccia da 1/2", combinazione con 3 pulsanti on-off per soffione, doccetta e getto a lama. Installazione possibile sia in verticale che in orizzontale.

1/2" built-in thermostatic shower mixer, arrangement with 3 on-off buttons for shower head, handshower and blade jet. Both vertical and horizontal installation possible.

R96703

Parte incasso / Built-in part



Marchio / Brand ZUCCHETTI

Classe / Class DOCCE

HOOP

ZHO822

Finiture / Finishes



Cromo / Chrome



C3

Nickel Spazzolato / Brushed Nickel



C8

Nickel Lucido / Polished Nickel



C50

Metal Black / Metal Black



C51

Metal Black spazzolato / Brushed Metal Black



N6

Nero opaco / Matt black



P21

PVD brushed chocolate / PVD brushed chocolate



P30

British Gold PVD / British Gold PVD



P31

Brushed PVD British gold / Brushed PVD British gold



P41

PVD Oro Spazzolato / PVD Brushed Gold



P60

Platino PVD / Platinum PVD



P80

Total black PVD / Total black PVD



P81

Brushed total black PVD / Brushed total black PVD

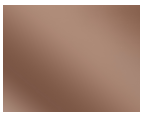

P90

Copper PVD / Copper PVD



P91

Brushed PVD Copper / Brushed PVD Copper



J3

Glossy gesso / Glossy gesso



K7

Pearl cipria / Pearl cipria



R6

Pearl chili / Pearl chili



V7

Pearl salvia / Pearl salvia



V8

Matt mirto / Matt mirto

Note / Notes

HOOP

ZHO822 Disegno Complessivo / Overall Drawing

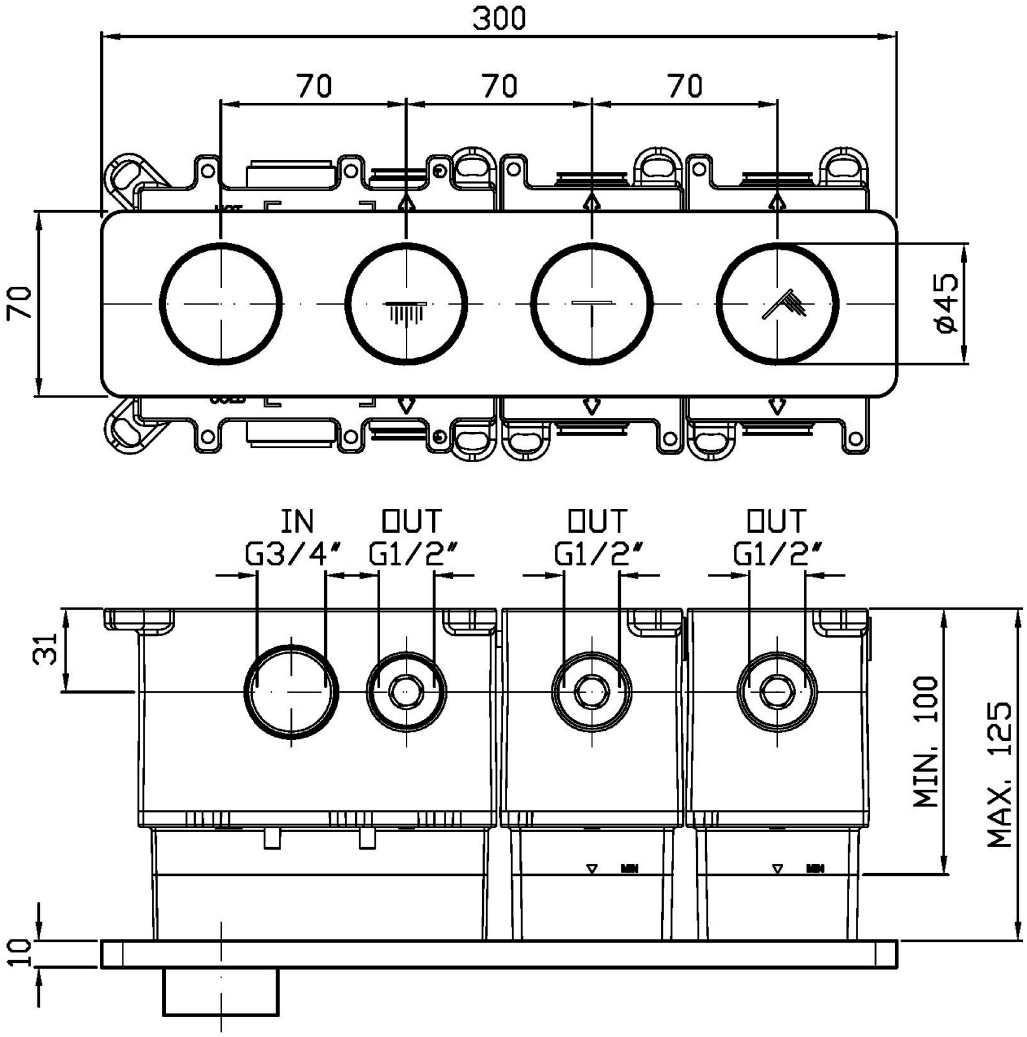

Marchio / Brand ZUCCHETTI

Classe / Class DOCCE

HOOP

ZHO822 Esplosi / Exploded

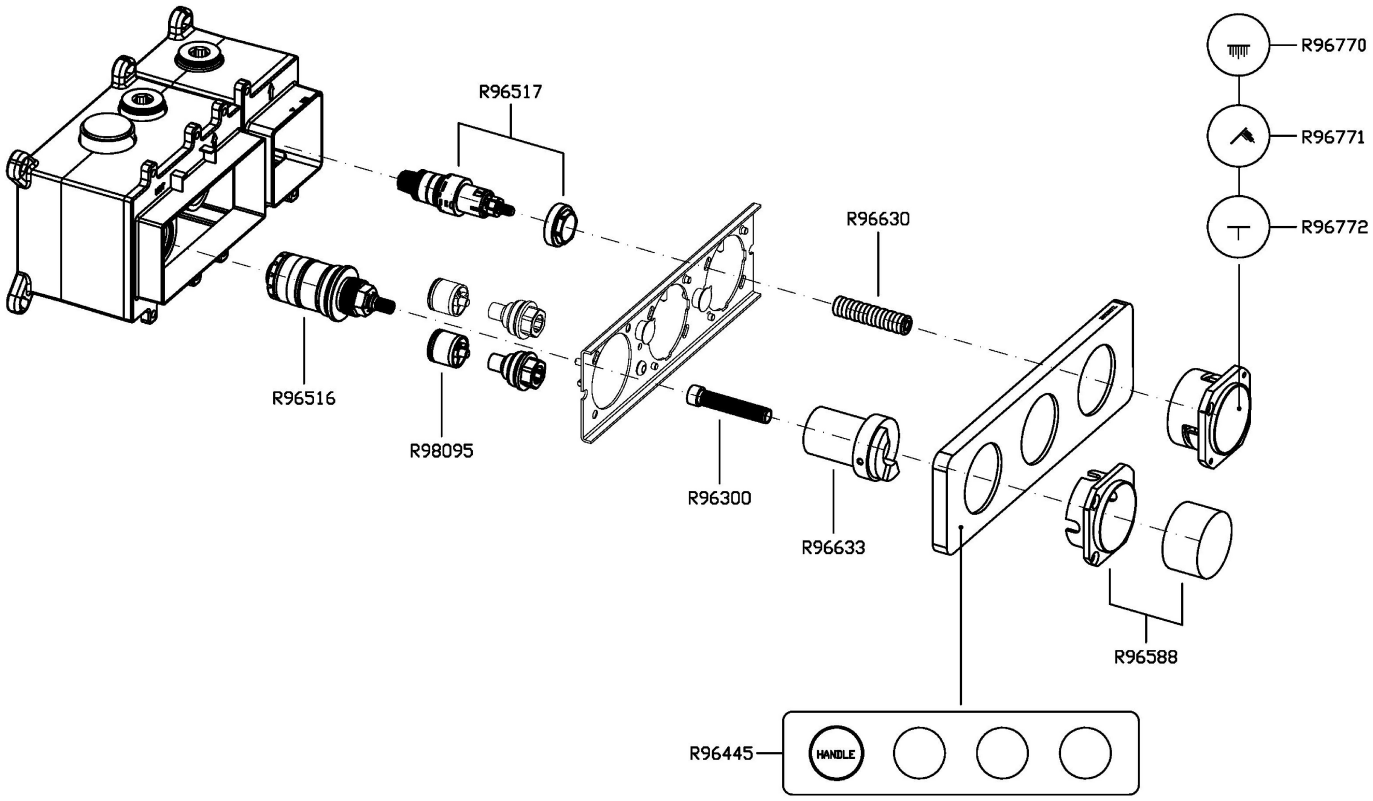

HOOP

ZHO822 Portate / Flowrates (lt/min)

PRESSIONE PRESSURE	1 BAR	2 BAR	3 BAR	4 BAR	5 BAR
P1 1 RUBINETTO APERTO 1 TAP OPENED	**7**	**11**	**13,5**	**15**	**16,5**
P2 2 RUBINETTO APERTI 2 TAPS OPENED	**10,5**	**16**	**20**	**23**	**26**
P3 3 RUBINETTO APERTI 3 TAPS OPENED	**11,5**	**17,5**	**22**	**25,2**	**29**
P4					
P5					

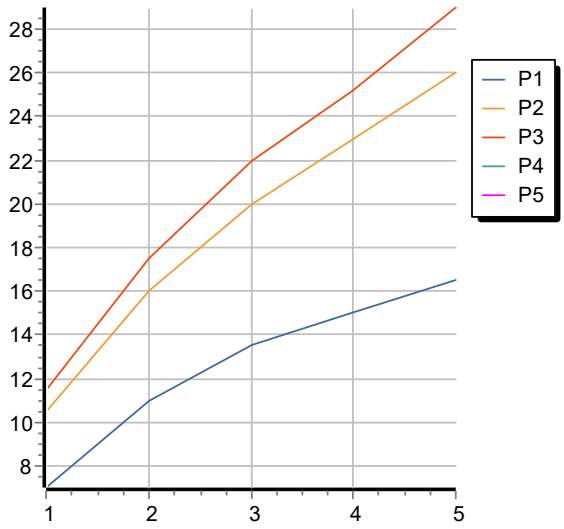

HOOP

ZHO822 Pesi e Misure / Weights and Sizes

Peso (Kg) Weight (lb)	1,95 (Kg)	4,30 (lb)
Volume test (dc3) - (in3)	7,50 (dc3)	457,68 (in3)
h (mm) - (in)	90,00 (mm)	3,54 (in)
L1 (mm) - (in)	250,00 (mm)	9,84 (in)
L2 (mm) - (in)	333,00 (mm)	13,11 (in)

