Marchio / Brand ZUCCHETTI

Classe / Class WW

JINGLE

ZIN417 Idroscopino wc/bidet completo di miscelatore monocomando incasso. / WC/bidet hydrobrush with built-in mixer.



Idroscopino wc/bidet completo di miscelatore monocomando incasso, doccetta shut-off in ottone, appendidoccia duplex e flessibile da 1200 mm.
Water Saving - portata d'acqua uguale o inferiore a 6 l/min.

WC/bidet hydrobrush with built-in single lever mixer, brass shut-off handshower, handshower support and 1200 mm flexible hose.
Water Saving - water flow rate of 6 l/min or less.

R96720

Parte incasso / Built-in part



Marchio / Brand ZUCCHETTI

Classe / Class WW

JINGLE

ZIN417

Finiture / Finishes



Cromo / Chrome



C3

Nickel Spazzolato / Brushed Nickel



C8

Nickel Lucido / Polished Nickel



C50

Metal Black / Metal Black



C51

Metal Black spazzolato / Brushed Metal Black



N6

Nero opaco / Matt black

Note / Notes

JINGLE

ZIN417 Disegno Complessivo / Overall Drawing

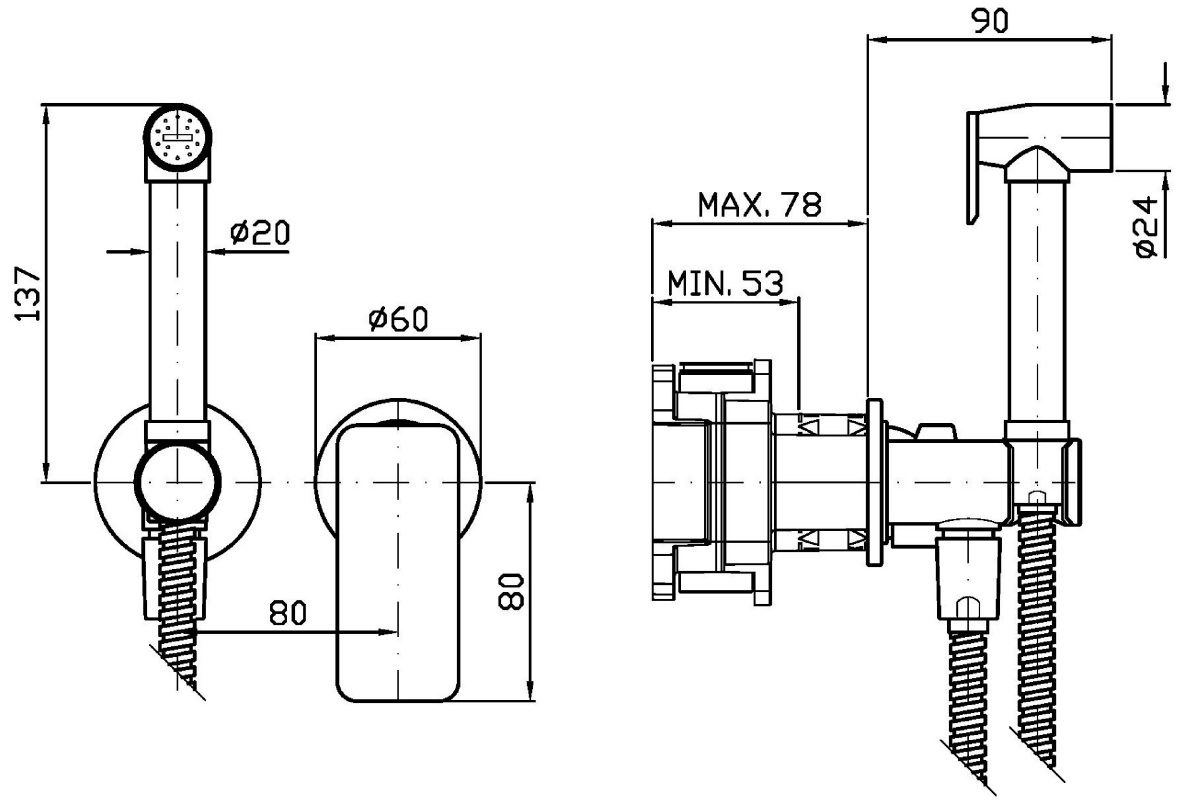

JINGLE

ZIN417 Esplosi / Exploded

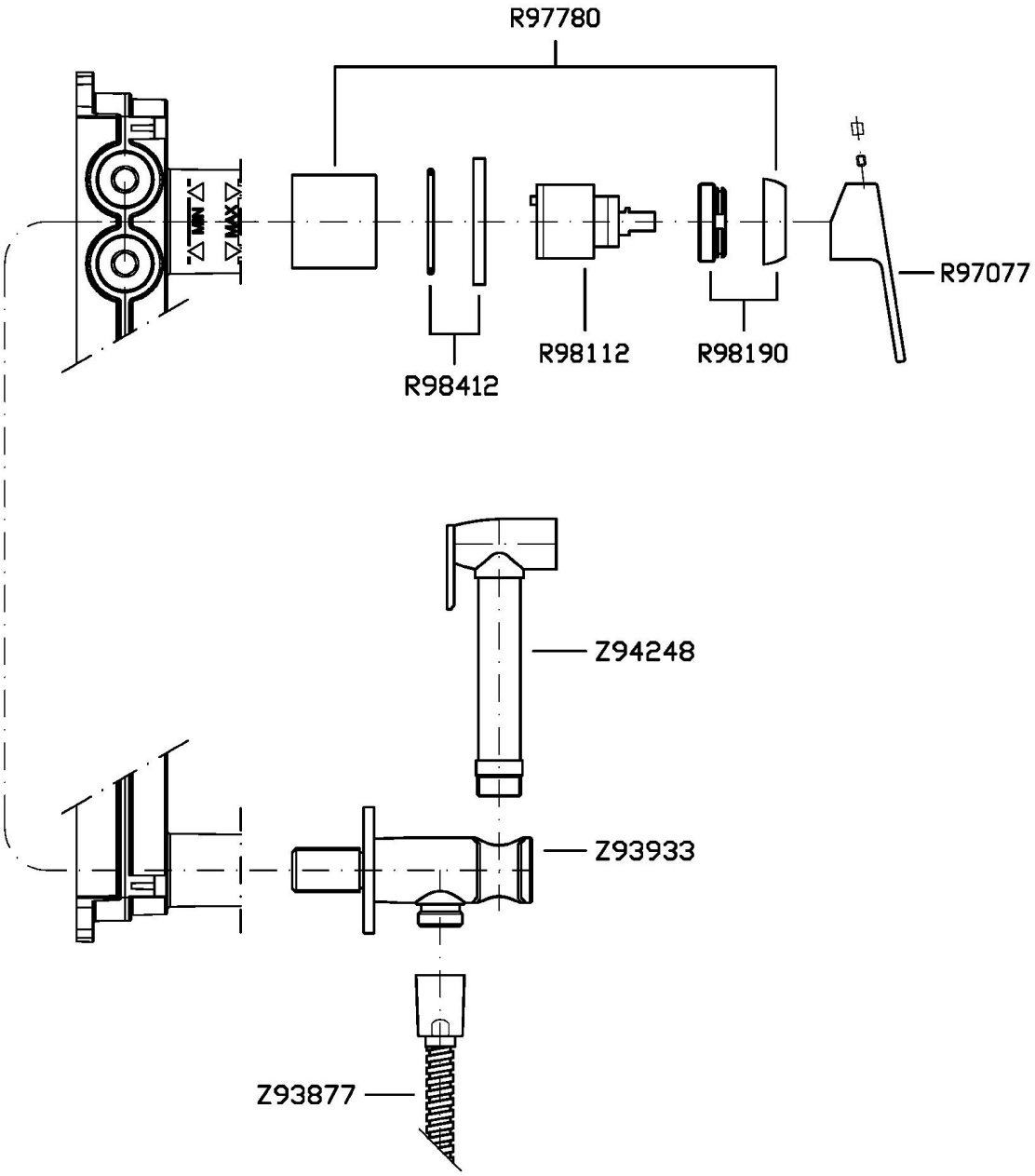

JINGLE

ZIN417 Portate / Flowrates (lt/min)

	PRESSIONE PRESSURE	1 BAR	2 BAR	3 BAR	4 BAR	5 BAR
P1	DOCCETTA HANDSHOWER	**3,1**	**4,1**	**4,7**	**5**	**5**
P2						
P3						
P4						
P5						

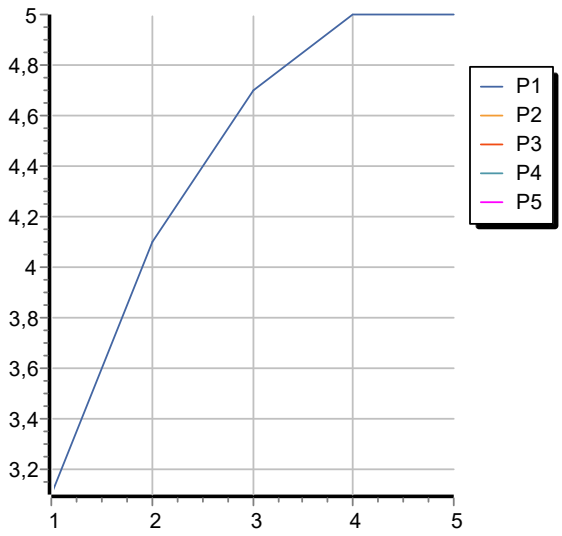

JINGLE

ZIN417 Pesi e Misure / Weights and Sizes

Peso (Kg) Weight (lb)	1,20 (Kg)	2,65 (lb)
Volume test (dc3) - (in3)	4,05 (dc3)	247,15 (in3)
h (mm) - (in)	70,00 (mm)	2,76 (in)
L1 (mm) - (in)	150,00 (mm)	5,91 (in)
L2 (mm) - (in)	385,00 (mm)	15,16 (in)

