Marchio / Brand ZUCCHETTI

Classe / Class WW

JINGLE

ZIN804 Termostatico incasso doccia con 4 rubinetti d'arresto. / Built-in thermostatic shower mixer 4 stop valves.

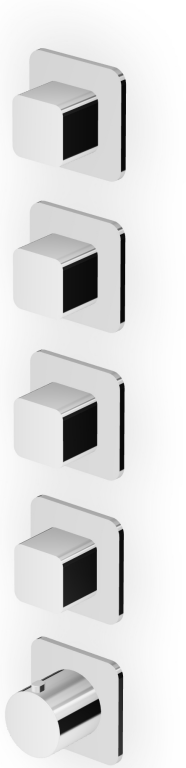

Termostatico incasso doccia da 3/4", con 4 rubinetti d'arresto. Installazione possibile sia in verticale che in orizzontale.

3/4" built-in thermostatic shower mixer with 4 stop valves. Both vertical and horizontal installation possible.

R96733

Parte incasso / Built-in part



Marchio / Brand ZUCCHETTI

Classe / Class WW

JINGLE

ZIN804

Finiture / Finishes



Cromo / Chrome



C3

Nickel Spazzolato / Brushed Nickel



C8

Nickel Lucido / Polished Nickel



C50

Metal Black / Metal Black



C51

Metal Black spazzolato / Brushed Metal Black



N6

Nero opaco / Matt black

Note / Notes

JINGLE

ZIN804 Disegno Complessivo / Overall Drawing

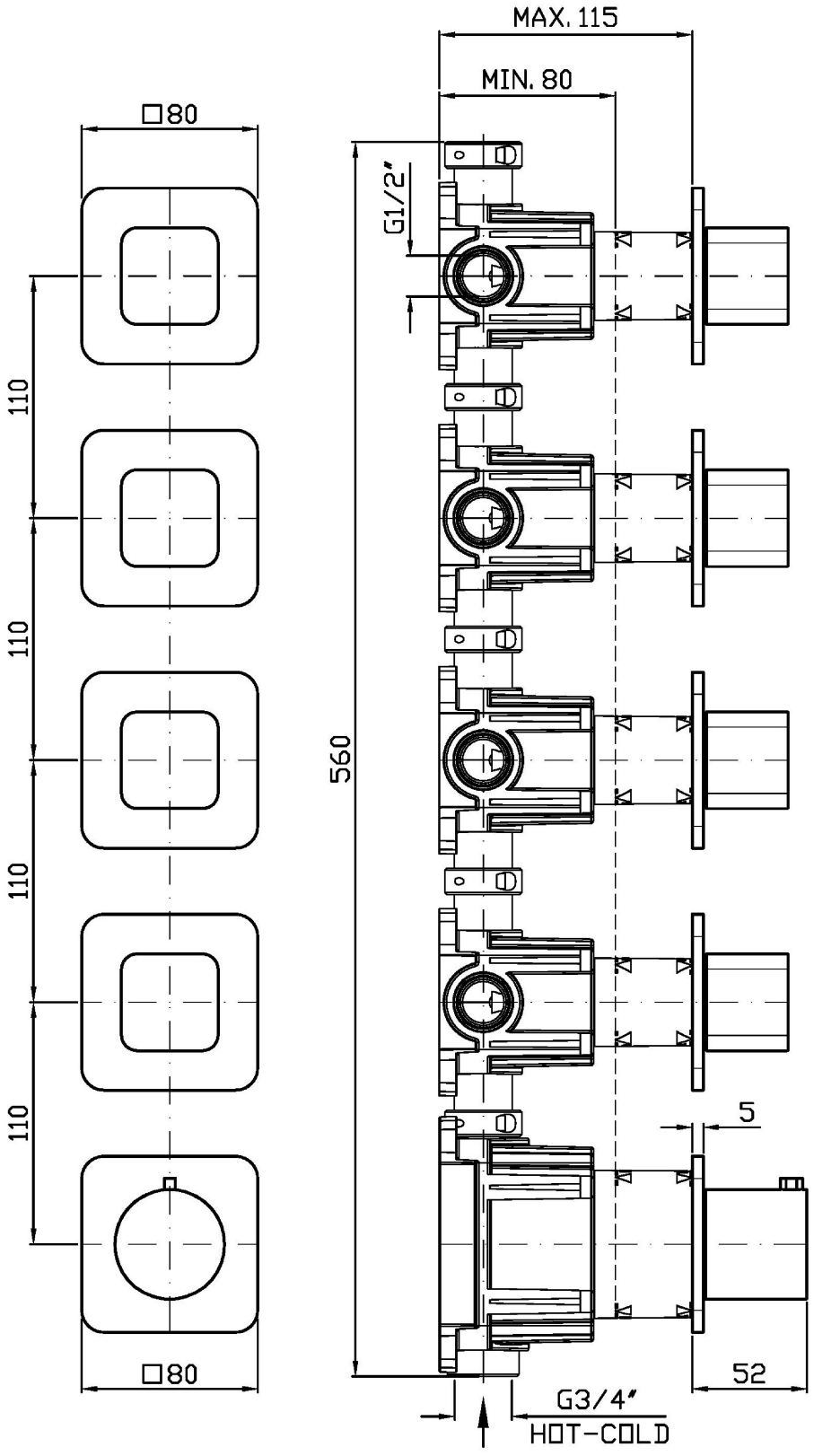

Marchio / Brand ZUCCHETTI

Classe / Class WW

JINGLE

ZIN804 Esplosi / Exploded

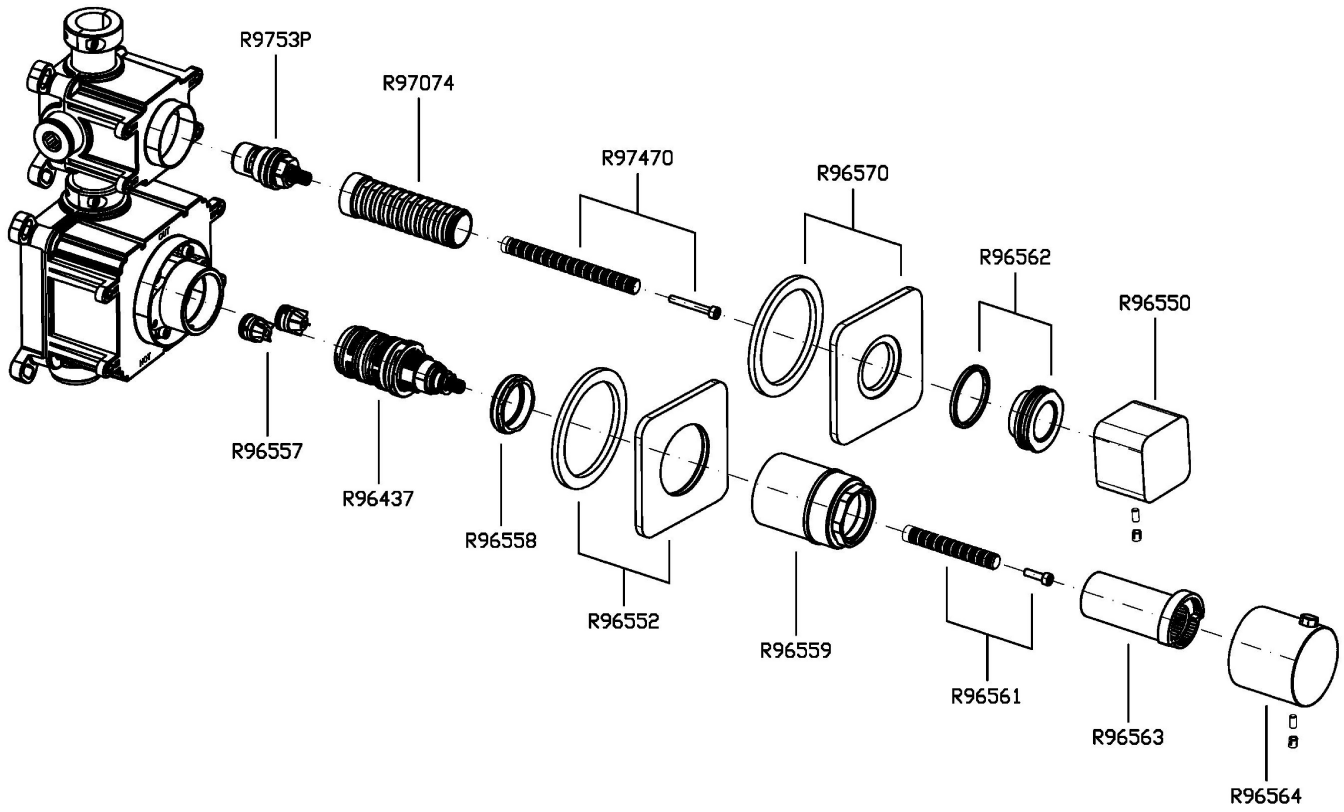

JINGLE

ZIN804 Portate / Flowrates (lt/min)

PRESSIONE PRESSURE	1 BAR	2 BAR	3 BAR	4 BAR	5 BAR
P1 1 RUBINETTO APERTO 1 TAP OPENED	**13,7**	**19,1**	**23,2**	**26,2**	**29,5**
P2 2 RUBINETTO APERTI 2 TAPS OPENED	**16,1**	**22,2**	**27**	**30,5**	**34,2**
P3 3 RUBINETTO APERTI 3 TAPS OPENED	**16,8**	**23**	**28**	**31,6**	**34,2**
P4 4 RUBINETTO APERTI 4 TAPS OPENED	**17**	**23,1**	**28,2**	**31,6**	**34,2**
P5					

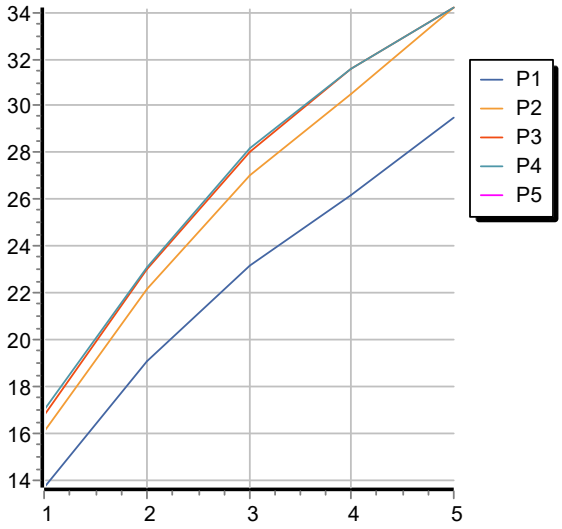

JINGLE

ZIN804 Pesi e Misure / Weights and Sizes

Peso (Kg) Weight (lb)	3,00 (Kg)	6,61 (lb)
Volume test (dc3) - (in3)	11,01 (dc3)	671,87 (in3)
h (mm) - (in)	90,00 (mm)	3,54 (in)
L1 (mm) - (in)	335,00 (mm)	13,19 (in)
L2 (mm) - (in)	365,00 (mm)	14,37 (in)

