Marchio / Brand ZUCCHETTI

Classe / Class WW

ISY22

ZIS417 Idroscopino wc/bidet completo di miscelatore monocomando incasso. / WC/bidet hydrobrush with built-in mixer.



Idroscopino wc/bidet completo di miscelatore monocomando incasso, doccetta shut-off in ottone, appendidoccia duplex e flessibile da 1200 mm.
Water Saving - portata d'acqua uguale o inferiore a 6 l/min.

WC/bidet hydrobrush with built-in single lever mixer, brass shut-off handshower, handshower support and 1200 mm flexible hose.
Water Saving - water flow rate of 6 l/min or less.

R96720

Parte incasso / Built-in part



Marchio / Brand ZUCCHETTI

Classe / Class WW

ISY22

ZIS417

Finiture / Finishes



Cromo / Chrome



C3

Nickel Spazzolato / Brushed Nickel

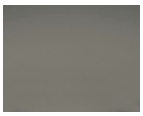

C50

Metal Black / Metal Black

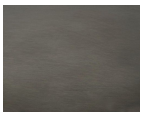

C51

Metal Black spazzolato / Brushed Metal Black



N6

Nero opaco / Matt black

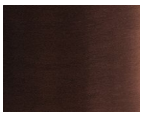

P21

PVD brushed chocolate / PVD brushed chocolate



P31

Brushed PVD British gold / Brushed PVD British gold



P81

Brushed total black PVD / Brushed total black PVD

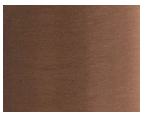

P91

Brushed PVD Copper / Brushed PVD Copper

Note / Notes

ISY22

ZIS417 Disegno Complessivo / Overall Drawing

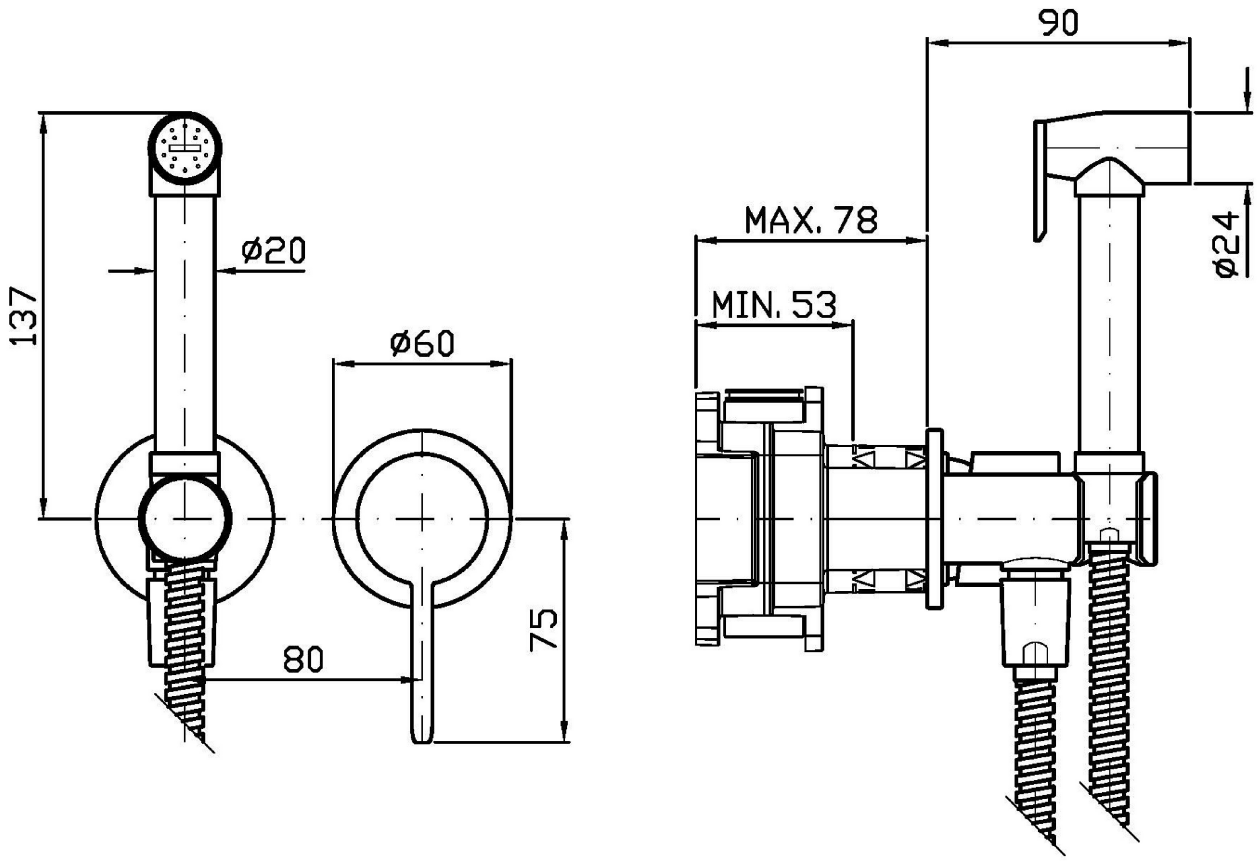

ISY22

ZIS417 Esplosi / Exploded

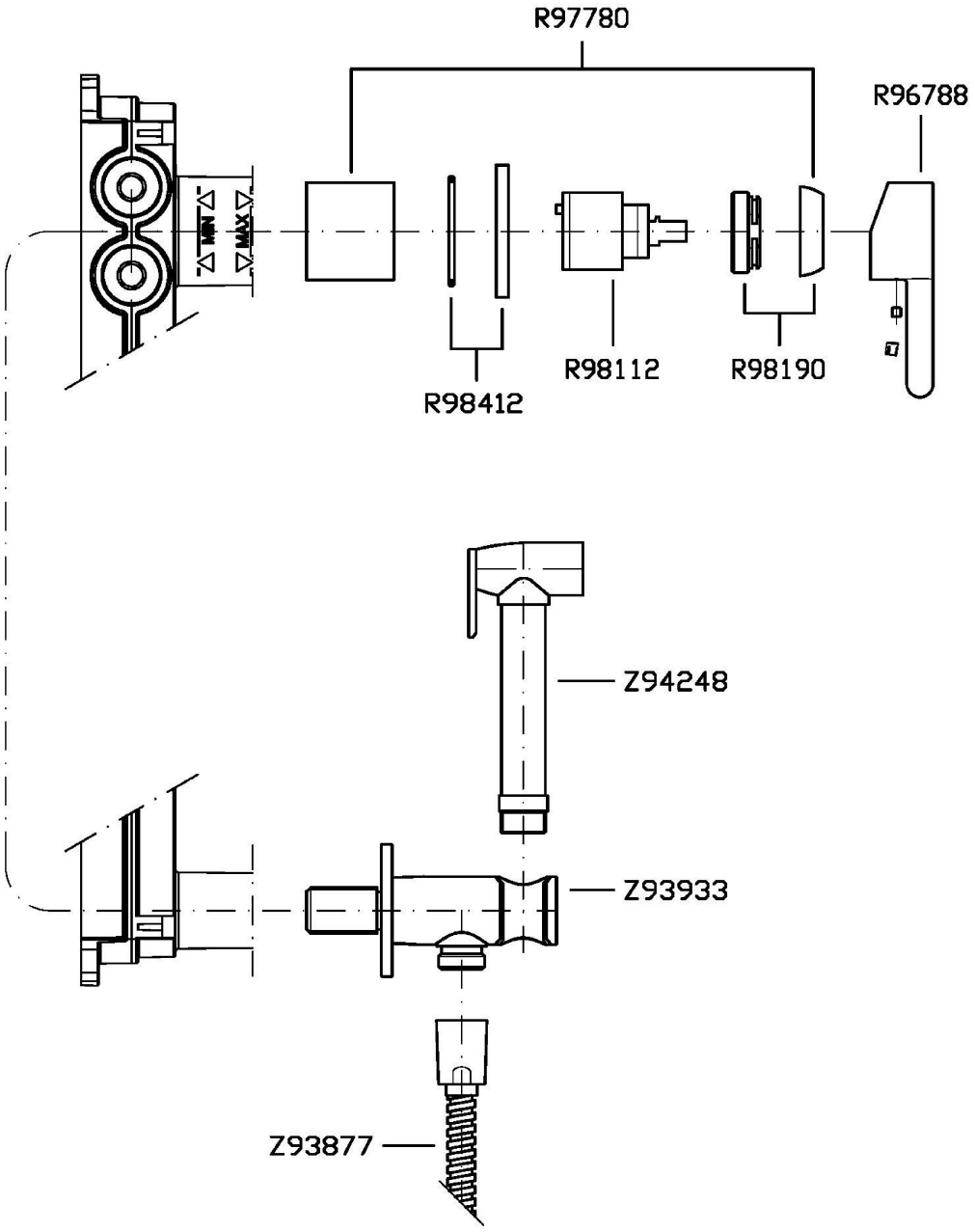

ISY22

ZIS417 Portate / Flowrates (lt/min)

PRESSIONE PRESSURE	1 BAR	2 BAR	3 BAR	4 BAR	5 BAR
P1 DOCCETTA HANDSHOWER	**6,3**	**9,3**	**11,8**	**12,6**	**14,4**
P2					
P3					
P4					
P5					

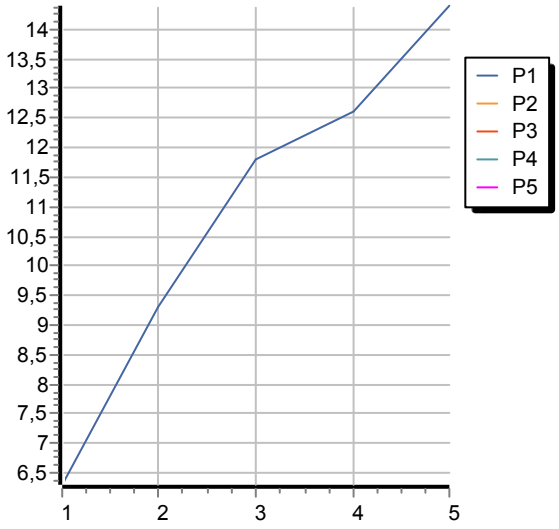

ISY22

ZIS417 Pesi e Misure / Weights and Sizes

Peso (Kg) Weight (lb)	1,20 (Kg)	2,65 (lb)
Volume test (dc3) - (in3)	4,05 (dc3)	247,15 (in3)
h (mm) - (in)	70,00 (mm)	2,76 (in)
L1 (mm) - (in)	150,00 (mm)	5,91 (in)
L2 (mm) - (in)	385,00 (mm)	15,16 (in)

