Marchio / Brand ZUCCHETTI

Classe / Class WW

OCTO X

ZOX417.X Idroscopino wc/bidet completo di miscelatore monocomando incasso. / WC/bidet hydrobrush with built-in mixer.

WATER SAVING



Idroscopino wc/bidet in acciaio inox AISI 316L completo di miscelatore monocomando incasso, doccetta shut-off in acciaio, appendidoccia duplex e flessibile da 1200 mm.

WC/bidet hydrobrush in AISI 316L stainless steel with built-in single lever mixer, stainless steel shut-off handshower, handshower support and 1200 mm flexible hose.

R96720

Parte incasso / Built-in part



Marchio / Brand ZUCCHETTI

Classe / Class WW

OCTO X

ZOX417.X

Finiture / Finishes



X

Acciaio inox spazzolato / Brushed stainless steel



XP21

Brushed PVD chocolate / Brushed PVD chocolate



XP31

Brushed PVD British gold / Brushed PVD British gold



XP41

Brushed PVD gold / Brushed PVD gold



XP81

PVD Brushed Total Black / PVD Brushed Total Black



XP91

Brushed PVD copper / Brushed PVD copper

Note / Notes

OCTO X

ZOX417.X Disegno Complessivo / Overall Drawing

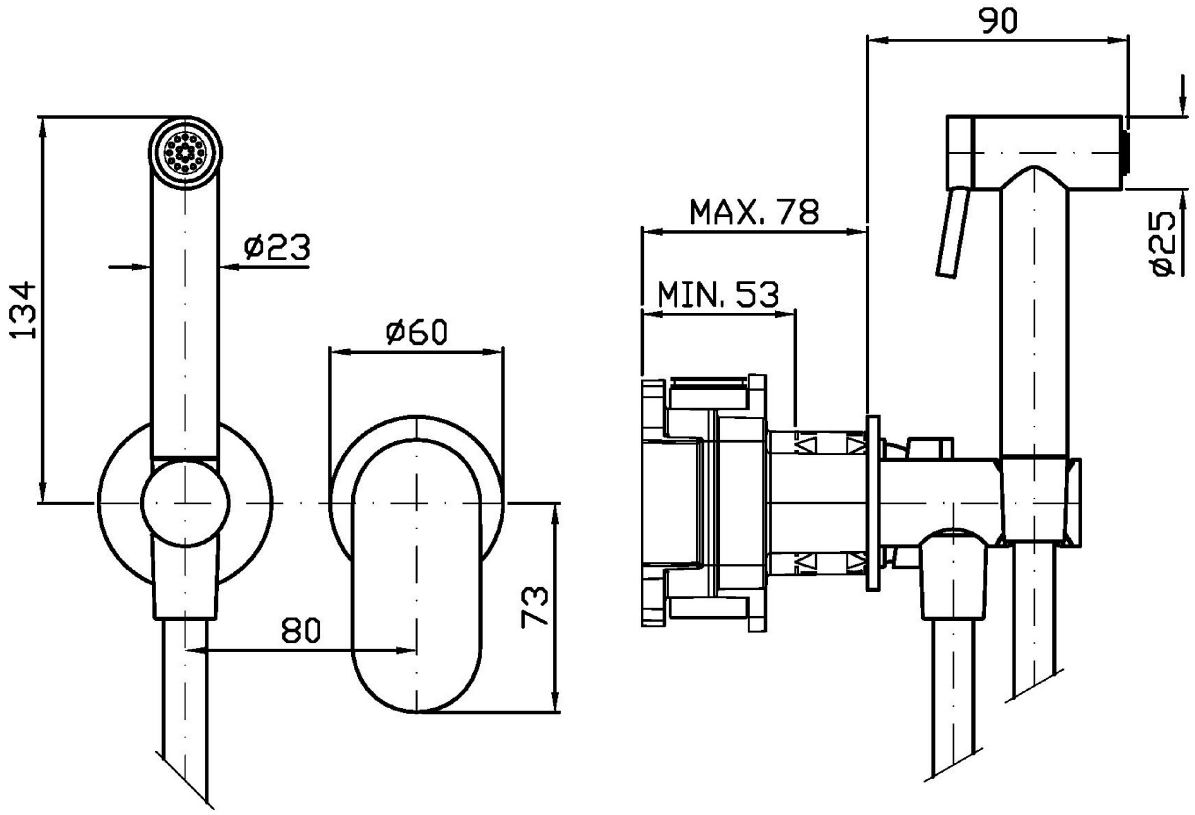

OCTO X

ZOX417.X Esplosi / Exploded

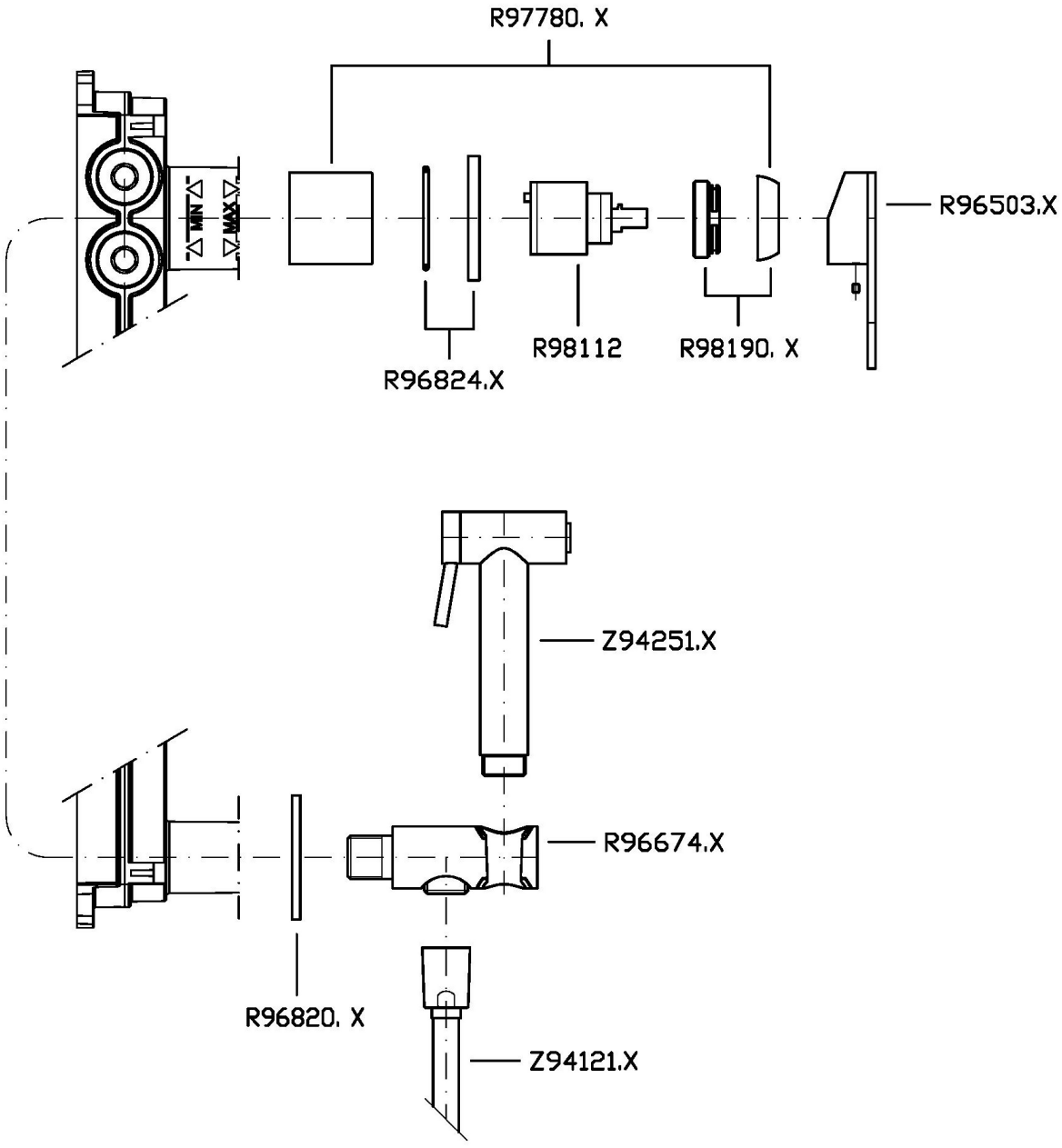

OCTO X

ZOX417.X Portate / Flowrates (lt/min)

PRESSIONE PRESSURE	1 BAR	2 BAR	3 BAR	4 BAR	5 BAR
P1 DOCCETTA HANDSHOWER	**2,7**	**2,7**	**3,2**	**3,2**	**3,2**
P2					
P3					
P4					
P5					

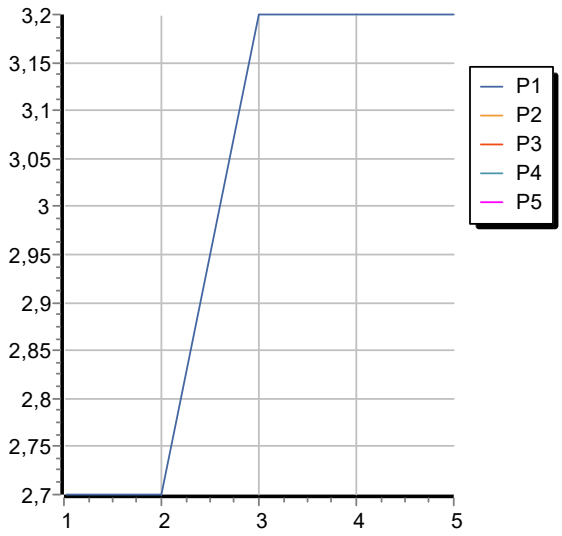

OCTO X

ZOX417.X Pesi e Misure / Weights and Sizes

Peso (Kg) Weight (lb)	1,20 (Kg)	2,65 (lb)
Volume test (dc3) - (in3)	4,05 (dc3)	247,15 (in3)
h (mm) - (in)	70,00 (mm)	2,76 (in)
L1 (mm) - (in)	150,00 (mm)	5,91 (in)
L2 (mm) - (in)	385,00 (mm)	15,16 (in)

